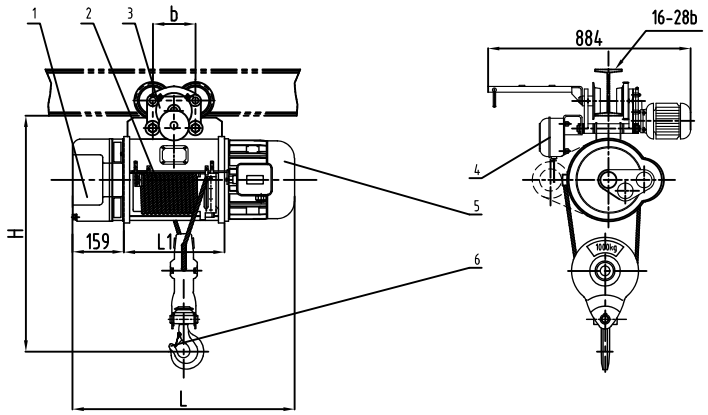

Lifting capacity	t	1	
Lifting height	m	6	9
Hoisting speed	m/min	8 (0.8/8)	
Traveling speed	m/min	20	
Working system		Intermediate JC=25%	
Combine time	Times per hour	120	
Lifting motor	Power kw	1.5 (0.2/1.5)	
	Rev r/min	1380	
Hoisting reducer ratio	i	47.3	
Reel diameter	mm	176	
Wirerope	GB8918	7.4NAT-6X37+FC 1670	
Traveling motor	Power kw	0.2	
	Rev r/min	1380	
Wheel dia	mm	114	
Traveling reducer ratio	i	25.3	
Working rail	Type	I16-I28b GB706	
	Minimum radius (m)	1.5	1.5
Max. wheel loading	kg	650	750
Total weight (kg)	CD	137	145
	MD	164	174

Lifting height	6	9
L1	345	443
L	785	856
b	185	185
H	667	

number	code	name	stuff	quantity	single weight (kg)	total weight (kg)	remark
6		Hook assembly	part	1			
5		Conic rotor brake motor	part	1			
4		Electrical installation	part	1			
3		Motor-driven carrier	part	2			
2		Reel device	part	1			
1		Reducer	part	1			

mark	disposal	change file	sign	date	Electric hoist CD1 (MD1) 1t	Yuantai Crane Machinery	
design		standard				Page one	Weight (kg)	Scale
check		electric				Total		1:10
verify		approval			H=6m-9m		
technic		date				Reference drawing	