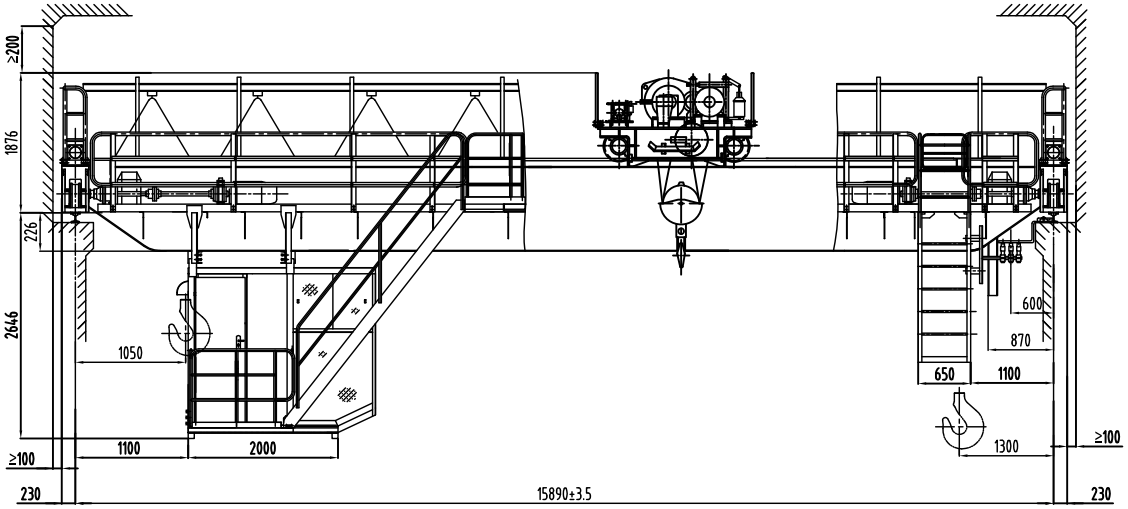

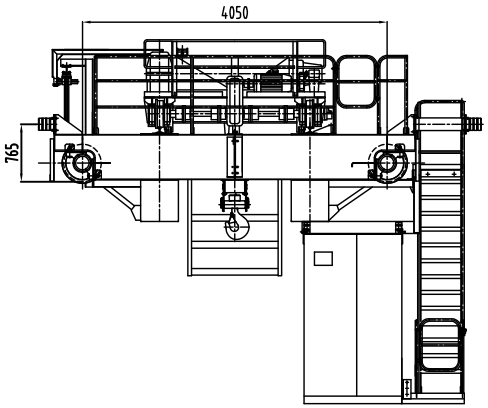

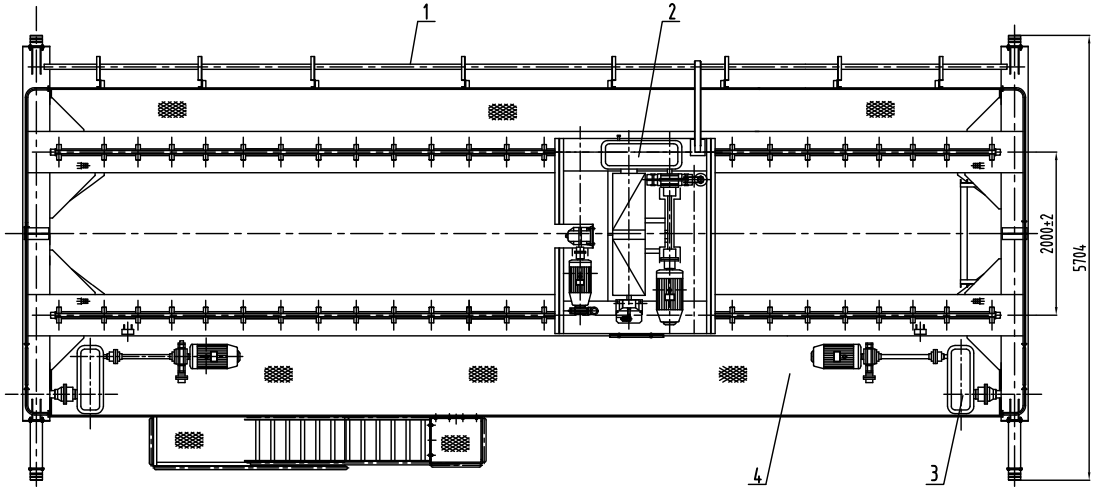

Main technical parameters

Item \ Mechanism name		Lifting: Main lifting	Item \ Mechanism name		Traveling: Trolley	Traveling: Crane
Lifting capacity	t	**10**	Track gauge	m	**2**	**15.89**
Lifting speed	m/min	**8.5**	Traveling speed	m/min	**43.8**	**90.7**
Working duty		**M5**	Working duty		**M5**	**M5**
Max.Lifting height	m	**7**	Cuisine stroke	mm	**60**	**150**
Total power	KW	**27.5**	Max. Wheel load	KN		**115**
Power supply		**3-phase, 440V, 50HZ**	Type of rail		P18	P43

Configuration

Mechanism name / Item	Lifting	Traveling: Trolley	Traveling: Crane
Motor	YZR 180L-6	YZR 132M1-6	YZR 132M2-6
Power	17KW	2.5KW	2×4KW
Brake	YWZ-300/45	YWZ-150/25	YWZ-200/25
Reducer	ZQ500-48.57	ZSC400-22.4	ZQ350-15.75
Wire group	14.5NAT-6×19W+FC1670	Wheel group 4×ϕ350	Wheel group 4×ϕ500
Drum group	ϕ400×1500		

number	code	name	stuff	quantity	weight (kg) single	weight (kg) total	remark
4		crane span structure	part	1			
3		crane travel mechanism	part	1			
2		trolley	part	1			
1		electric	part	1			

Technical Requirement

1. Manufactured according to relevant regulation of GB/T 14405
2. Distance from workshop backspin to crane peak should ≥200mm
3. Control mode: cab control

mark	level	change file	sign	date
design		standard		
check		electric		
verify		approval		
technic		date		

QD Double Girder Overhead Crane with Hook
QD 10t-15.89m

General drawing

Yuantai Crane Machinery

One page	Weight	Scale
Total	~17.5t	1:30

Reference drawing