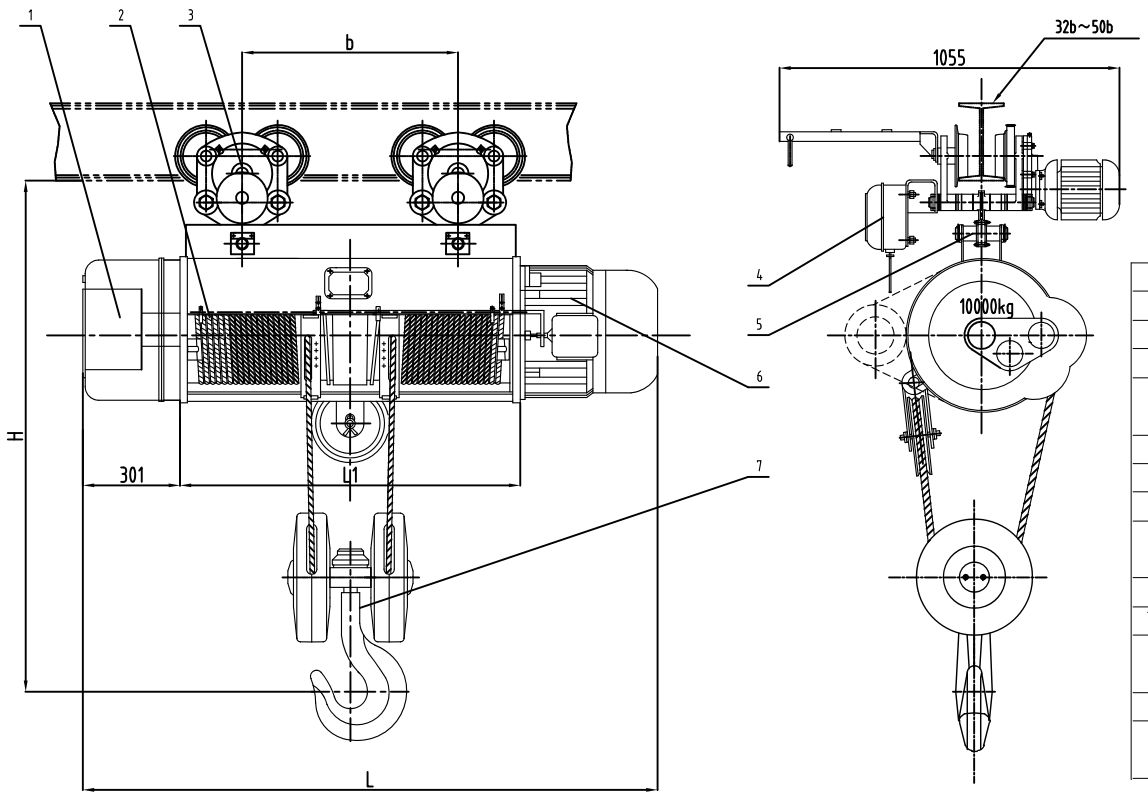

Hoisting speed	m/min	7 (0.7/7)				
Traveling speed	m/min	20				
Working system		Intermediate JC=25%				
Combine time	Times per hour	120				
Lifting motor	Power kw	13 (1.5/13)				
	Rev r/min	1400				
Hoisting reducer ratio	i	113.3				
Reel diameter	mm	350				
Wirerope	GB8918	15NAT-6X37+FC 1670				
Traveling motor	Power kw	0.8				
	Rev r/min	1380				
Wheel dia	mm	154				
Traveling reducer ratio	i	30.5				
Working rail	Type	I32b-I50b GB706				
	Minimum radius (m)	3.5	4	6	7.5	9
Max. wheel loading	kg	about 2000				
Total weight (kg)	CD	1048	1098	1209	1301	1411
	MD	1104	1154	1265	1366	1467

Lifting height	9	12	18	24	30
L1	875	1056	1418	1780	2142
L	1602	1783	2145	2507	2869
b	490	670	1030	1395	1760
H	1350				

number	code	name	stuff	quantity	single weight (kg)	total weight (kg)	remark
7		Hook assembly	part	1			
6		Conic rotor brake motor	part	1			
5		Connection rack device	part	1			
4		Electrical installation	part	1			
3		Motor-driven carrier	part	2			
2		Reel device	part	1			
1		Reducer	part	1			

mark	Kinds	change file	sign	date	
design		standard			
check		electric			
verify		approval			
technic		date			

Electric hoist
CD1 (MD1) 10t

H=9m-30m

Yuantai Crane Machinery

Page one	Weight (kg)	Scale
Total		1:10

Reference drawing