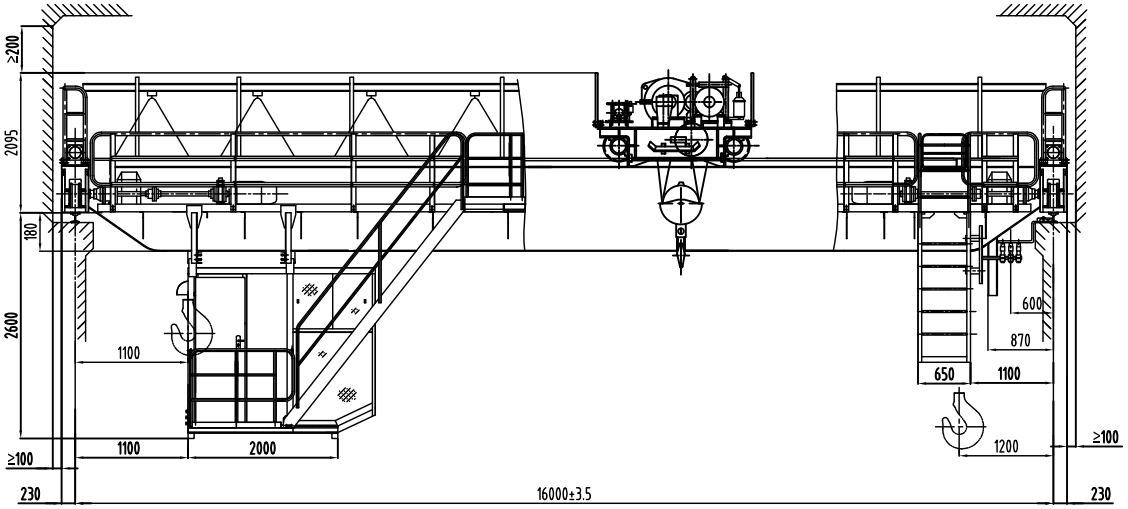

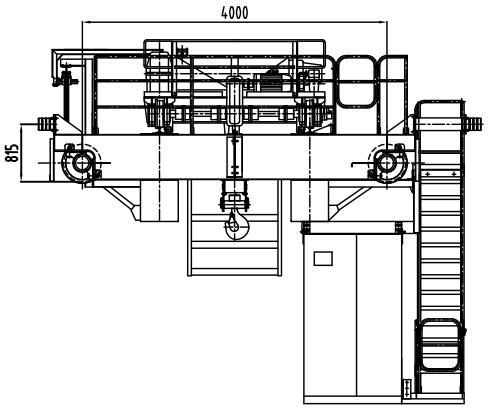

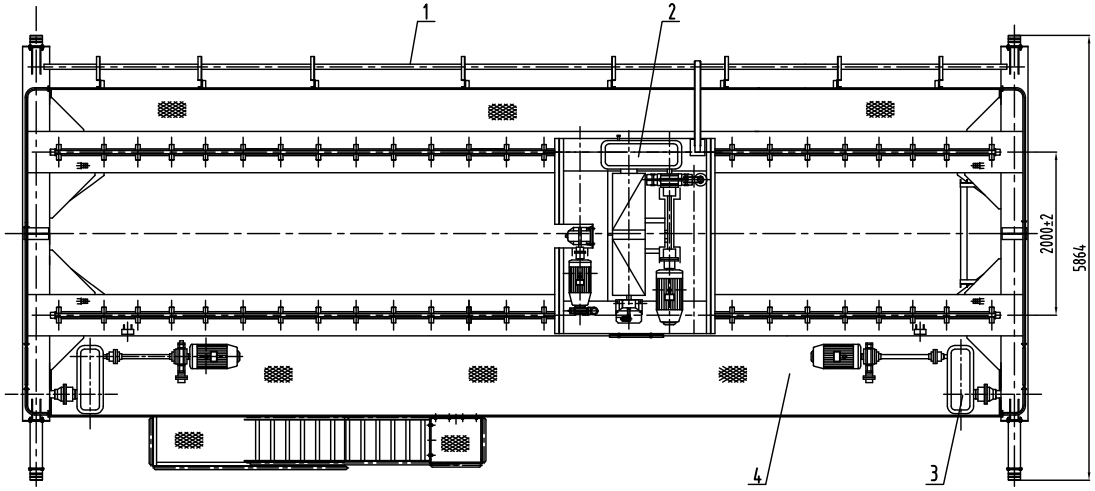

Main technical parameters

Mechanism name / Item		Lifting: Main lifting	Mechanism name / Item		Traveling: Trolley	Traveling: Crane
Lifting capacity	t	15	Track gauge	m	2	16
Lifting speed	m/min	7.9	Traveling speed	m/min	44.6	84.7
Working duty		M5	Working duty		M5	M5
Max.Lifting height	m	9	Cuisine stroke	mm	60	188
Total power	KW	42.6	Max. Wheel load	KN		150
Power supply	3-phase, 380V, 50HZ		Type of rail		P24	P43

Configuration			
Mechanism name	Lifting	Traveling	
Item		Trolley	Crane
Motor	YZR 225M-8	YZR 132M2-6	YZR 160M1-6
Power	26KW	4KW	2X6.3KW
Brake	YWZ-400/45	YWZ-150/25	YWZ-200/25
Reducer	ZQ650-48.57	ZSC400-22.4	ZQ350-20.49
Wire group	18NAT-6X19W+FC1670	Wheel group 4Xϕ350	Wheel group 4Xϕ600
Drum group	ϕ500X1500		

number	code	name	stuff	quantity	single weight (kg)	total weight (kg)	remark
4		crane span structure	part	1			
3		crane travel mechanism	part	1			
2		trolley	part	1			
1		electric	part	1			

Technical Requirement

1. Manufactured according to relevant regulation of GB/T 14405
2. Distance from workshop backspin to crane peak should ≥200mm
3. Control mode: cab control

mark	level	change file	sign	date	
design		standard			
check		electric			
verify		approval			
technic		date			

QD Double Girder Overhead Crane with Hook
QD 15t-16m

General drawing

Yuantai Crane Machinery

One page	Weight	Scale
Total	~21t	1:30

Reference drawing