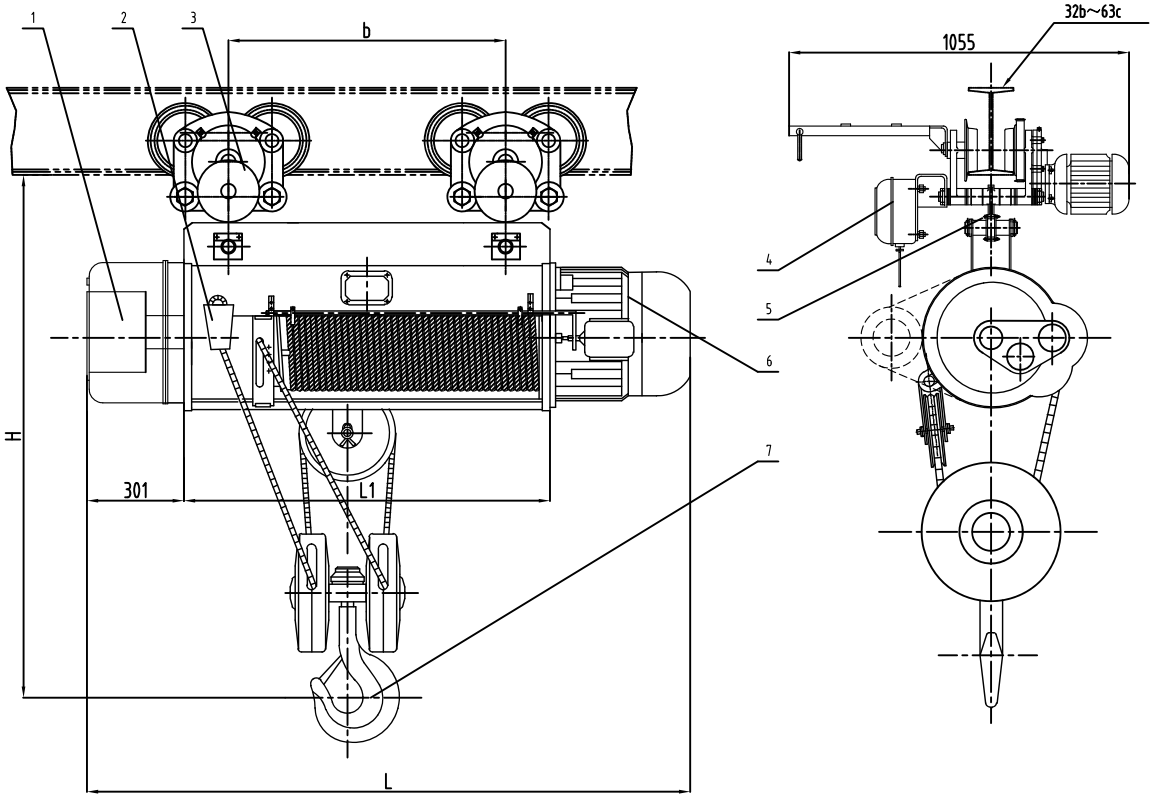

Lifting capacity	t	16				
Lifting height	m	9	12	18	24	30
Hoisting speed	m/min	3.5 (0.35/3.5)				
Traveling speed	m/min	18				
Working system		Intermediate JC=25%				
Combine time	Times per hour	120				
Lifting motor	Power kw	13 (1.5/13)				
	Rev r/min	1400				
Hoisting reducer ratio	i	113.3				
Reel diameter	mm	350				
Wirerope	GB8918	17.5NAT-6X37+FC 1670				
Traveling motor	Power kw	0.8				
	Rev r/min	1380				
Wheel dia	mm	164				
Traveling reducer ratio	i	39.7				
Working rail	Type	132b-163c GB706				
	Minimum radius (m)	3.5	4	6	8	11
Max. wheel loading	kg	about 4500				
Total weight (kg)	CD	1130	1183	1286	1463	1563
	MD	1220	1273	1376	1553	1653

Lifting height	9	12	18	24	30
L1	1136	1356	1796	2216	2651
L	1872	2092	2532	2952	3387
b	860	1080	1520	1940	2375
H	2100				

number	code	name	stuff	quantity	single weight (kg)	total weight (kg)	remark
7		Hook assembly	part	1			
6		Conic rotor brake motor	part	1			
5		Connection rack device	part	1			
4		Electrical installation	part	1			
3		Motor-driven carrier	part	2			
2		Reel device	part	1			
1		Reducer	part	1			

mark	Quantity	change file	sign	date
design		standard		
check		electric		
verify		approval		
technic		date		

Electric hoist
CD₁ (MD₁) 16t

H=9m-30m

Yuantai Crane Machinery

Page one	Weight (kg)	Scale
Total		1:10

Reference drawing