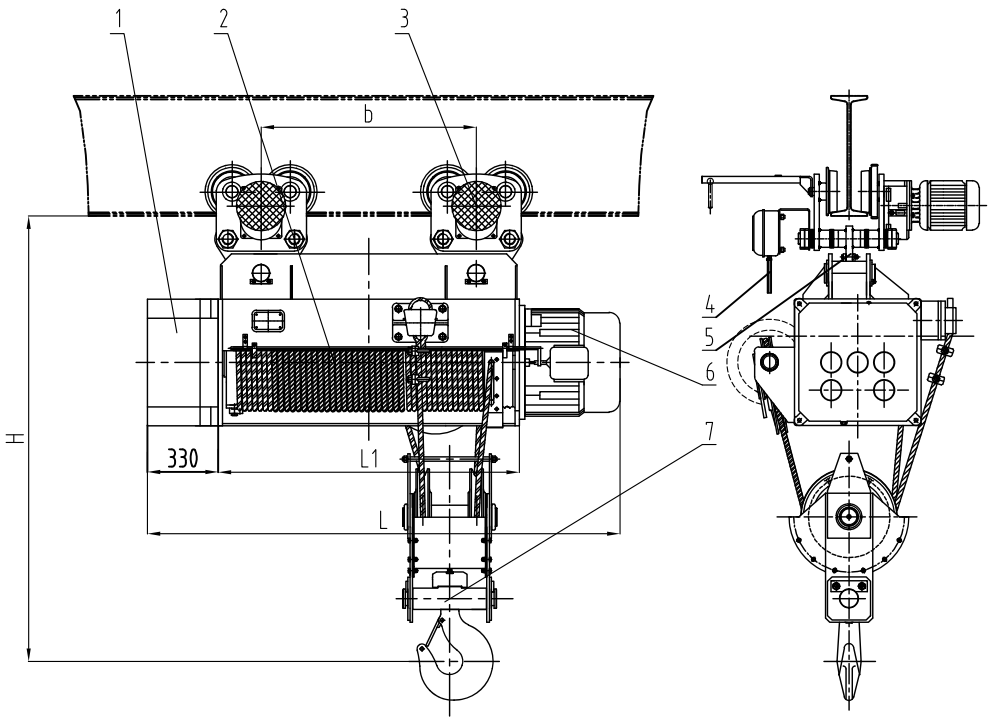

Lifting capacity	t	20							
Lifting height	m	9	12	15	18	21	24	27	30
Hoisting speed	m/min	4.2 (0.42/4.2)							
Traveling speed	m/min	14							
Working system		Intermediate JC=25%							
Combine time	Times per hour	120							
Lifting motor	Power kw	18.5 (2.2/18.5)							
	Rev r/min	1400							
Hoisting reducer ratio	i	113.3							
Reel diameter	mm	415							
Wirerope	GB8918	21.5NAT-6X37+FC 1670							
Traveling motor	Power kw	0.8							
	Rev r/min	1380							
Wheel dia	mm	164							
Traveling reducer ratio	i	39.7							
Working rail	Type	I56a-I63c GB706							
	Minimum radius (m)	3	3.5	4	5	6	7	8	9
Max. wheel loading	kg	about 5000							
Total weight (kg)		1838	1927	2025	2169	2240	2320	2444	2527

Lifting height	9	12	15	18	21	24	27	30
L1	948	1143	1354	1565	1776	1987	2198	2409
L	1747	1942	2153	2364	2575	2786	2997	3208
b	548	743	854	1165	1376	1587	1798	2009
H	2300							

number	code	name	stuff	quantity	single weight (kg)	total weight (kg)	remark
7		Hook assembly	part	1			
6		Conic rotor brake motor	part	1			
5		Connection rack device	part	1			
4		Electrical installation	part	1			
3		Motor-driven carrier	part	2			
2		Reel device	part	1			
1		Reducer	part	1			

mark	issue	change file	sign	date	Electric hoist HC 20t	Yuantai Crane Machinery	
						Page one / Total	Weight (kg) / Scale 1:15
design		standard			H=9m-30m	Reference drawing	
check		electric					
verify		approval					
technic		date					