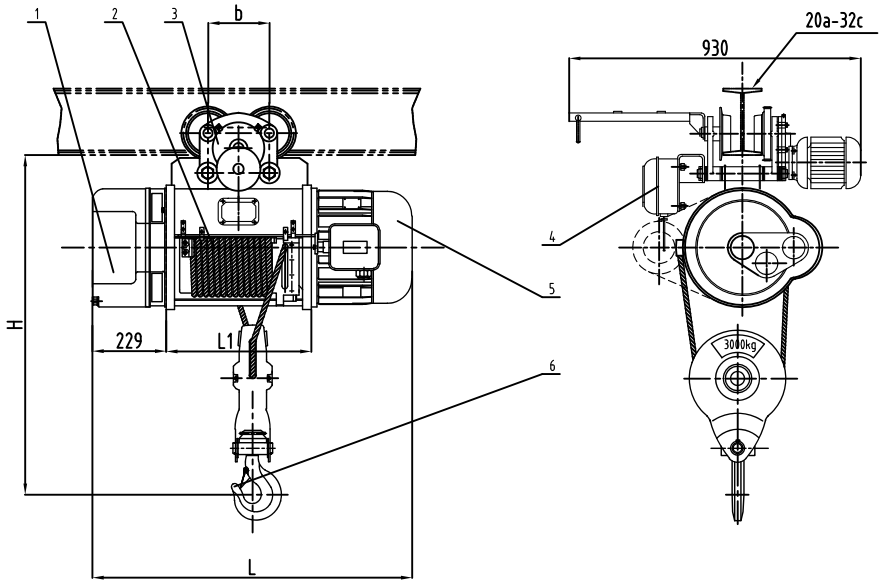

Lifting capacity	t	3	
Lifting height	m	6	9
Hoisting speed	m/min	8 (0.8/8)	
Traveling speed	m/min	20	
Working system		Intermediate JC=25%	
Combine time	Times per hour	120	
Lifting motor	Power kw	4.5 (0.4/4.5)	
	Rev r/min	1380	
Hoisting reducer ratio	i	69	
Reel diameter	mm	260	
Wirerope	GB8918	13NAT-6X37+FC 1670	
Traveling motor	Power kw	0.4	
	Rev r/min	1380	
Wheel dia	mm	134	
Traveling reducer ratio	i	28.2	
Working rail	Type	I20a-I32c GB706	
	Minimum radius (m)	2	2
Max. wheel loading	kg	1735	2025
Total weight (kg)	CD	281	297
	MD	311	327

Lifting height	6	9
L1	380	483
L	932	1038
b	205	205
H	954	

number	code	name	stuff	quanlity	single weight (kg)	total weight (kg)	remark
6		Hook assembly	part	1			
5		Conic rotor brake motor	part	1			
4		Electrical installation	part	1			
3		Motor-driven carrier	part	2			
2		Reel device	part	1			
1		Reducer	part	1			

mark	quantity	change file	sign	date	
design		standard			
check		electric			
verify		approval			
technic		date			

Electric hoist
CD₁ (MD₁) 3t

H=6m-9m

Yuantai Crane Machinery

Page one	Weight (kg)	Scale
Total		1:10

Reference drawing