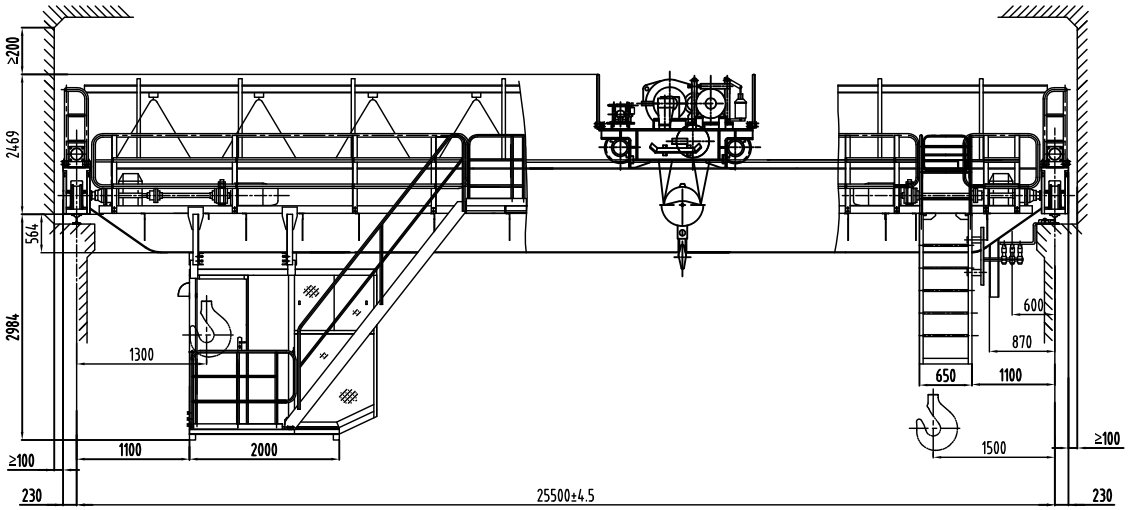

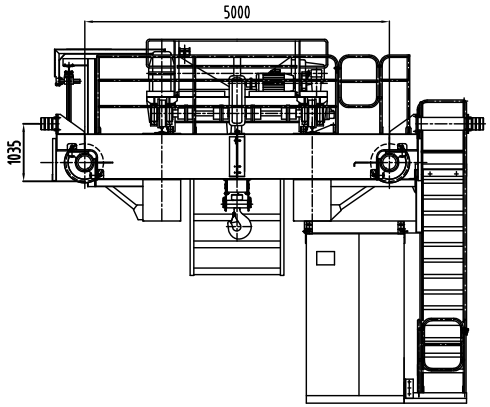

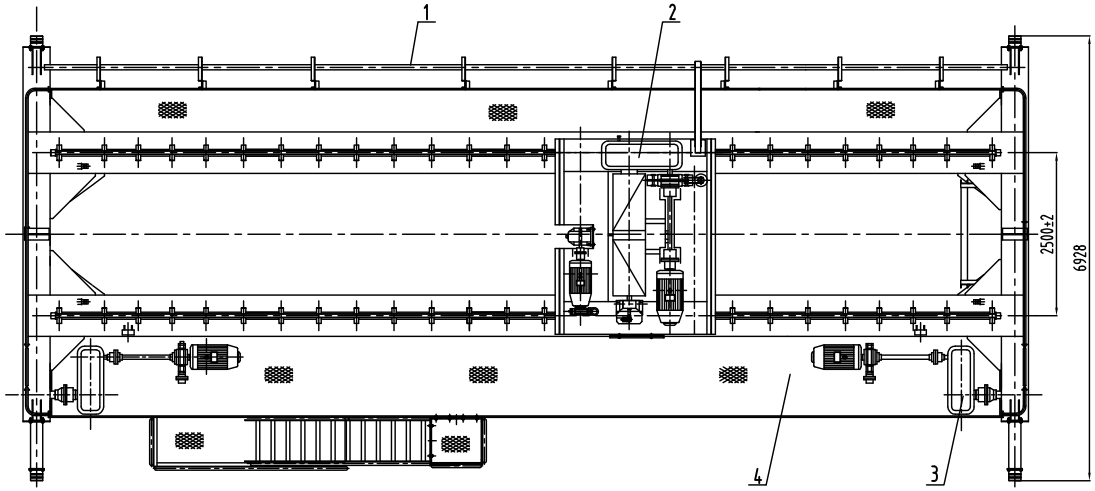

Main technical parameters

Item \ Mechanism name		Lifting: Main lifting	Item \ Mechanism name		Traveling: Trolley	Traveling: Crane
Lifting capacity	t	**32**	Track gauge	m	**2.5**	**25.5**
Lifting speed	m/min	**7.5**	Traveling speed	m/min	**42.4**	**74.6**
Working duty		**M5**	Working duty		**M5**	**M5**
Max.Lifting height	m	**12**	Cuisine stroke	mm	**60**	**150**
Total power	KW	**74.3**	Max. Wheel load	KN		**300**
Power supply		**3-phase, 380V, 50HZ**	Type of rail		P24	P43

Configuration

Mechanism name / Item	Lifting	Traveling: Trolley	Traveling: Crane
Motor	YZR 280S-10	YZR 160M1-6	YZR 160L-6
Power	42KW	6.3KW	2X13KW
Brake	YWZ-400/90	YWZ-200/25	YWZ-200/25
Reducer	ZQ850-40.17	ZSC600-27.3	ZQ500-31.5
Wire group	21.5NAT-6X19W+FC1670	Wheel group 4Xφ400	Wheel group 4Xφ800
Drum group	φ650X2000		

number	code	name	stuff	quantity	single weight (kg)	total weight (kg)	remark
4		crane span structure	part	1			
3		crane travel mechanism	part	1			
2		trolley	part	1			
1		electric	part	1			

Technical Requirement

1. Manufactured according to relevant regulation of GB/T 14405
2. Distance from workshop backspin to crane peak should ≥200mm
3. Control mode: cab control

mark	signal	change file	sign	date
design		standard		
check		electric		
verify		approval		
technic		date		

QD Double Girder Overhead Crane with Hook
QD 32t-25.5m A5

General drawing

Yuantai Crane Machinery

One page	Weight	Scale
Total	~44t	1:30

Reference drawing