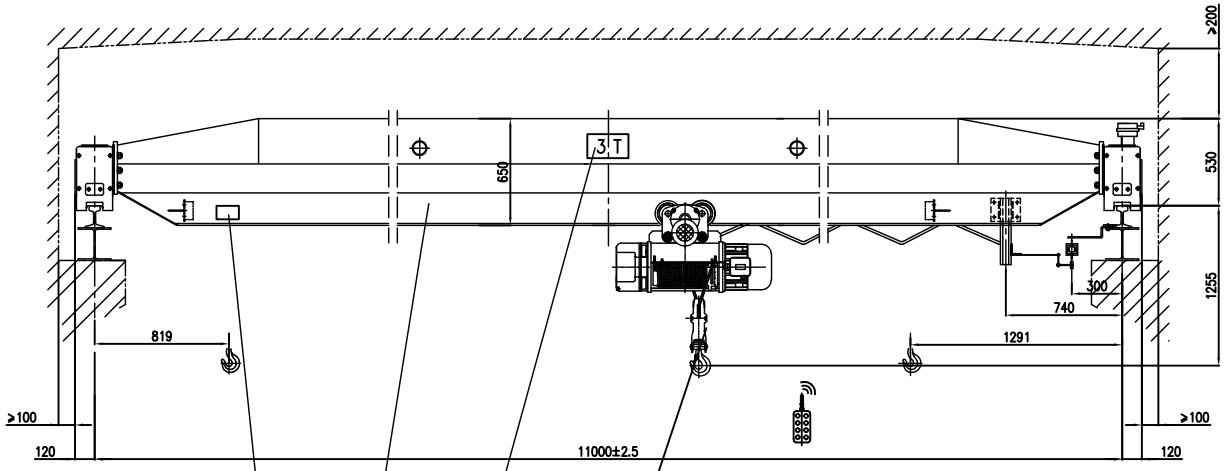

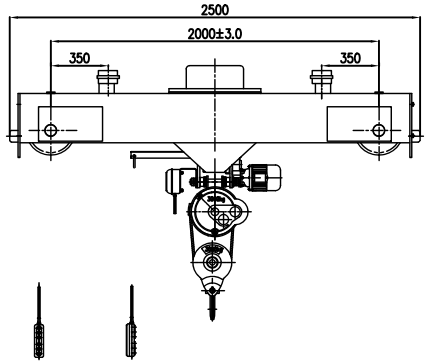

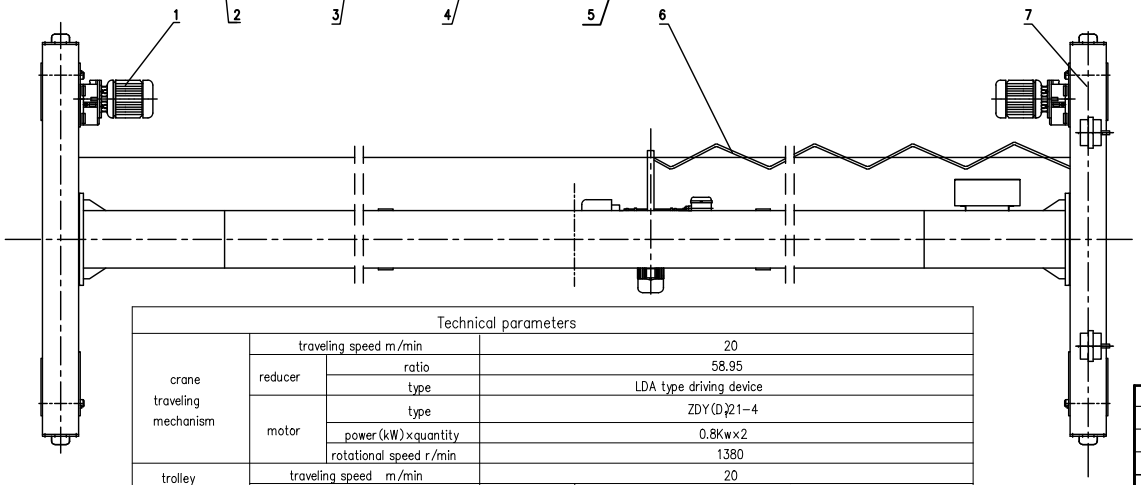

Technical Requirement

1.Manufacture, install and use according to JB/T 1306-2008

2.Distance from workshop backspin to crane peak should ≥200mm

3.Control mode: ground control

4.Crane power supply mode: safe slide wire

5.Trolley power supply mode: wire rope slideway

Technical parameters					
crane traveling mechanism	traveling speed m/min		20		
	reducer	ratio	58.95		
		type	LDA type driving device		
	motor	type	ZDY(D)21-4		
		power(kW)×quantity	0.8Kw×2		
		rotational speed r/min	1380		
trolley traveling mechanism	traveling speed m/min		20		
	travel motor type		ZDY_1 12-4	reducer type	723
	power(kW)×quantity		0.4kW×1	motor rotational speed r/min	1380
lifting mechanism	lifting height m		6	hoist type	CD_1
	lifting speed m/min		8	lifting capacity t	3
	lifting motor type		ZD_1 32-4	wire rope structure	13NAT6×37-FC1670ZS
	power(kW)×quantity		4.5kW×1	wire rope diameter	φ13
overall parameter	Track		P24	wheel pavement diameter	φ270
	max. wheel load kN		20.4	working duty	A3
	min. wheel load kN		5	power supply	AC 380V 50Hz
	total power kw		6.5	ambient temperature	-20℃~+40℃

number	code	name	stuff	quantity	single weight (kg)	total weight (kg)	remark
7		end girder	part	2			
6		electric device	part	1			
5		electric hoist	part	1			
4		tonnage card installed	part	1			
3		main girder	part	1			
2		nameplate installed	part	1			
1		crane traveling mechanism	part	2			

mark	quant	change file	sign	date	
design		standard		LD Type Single Girder Electric Crane LD 3t-11m	Yuantai Crane Machinery
check		electric			Page one / Weight ~2.31t / Scale 1:30
verify		approval		General drawing	Total
technic		date			Reference drawing