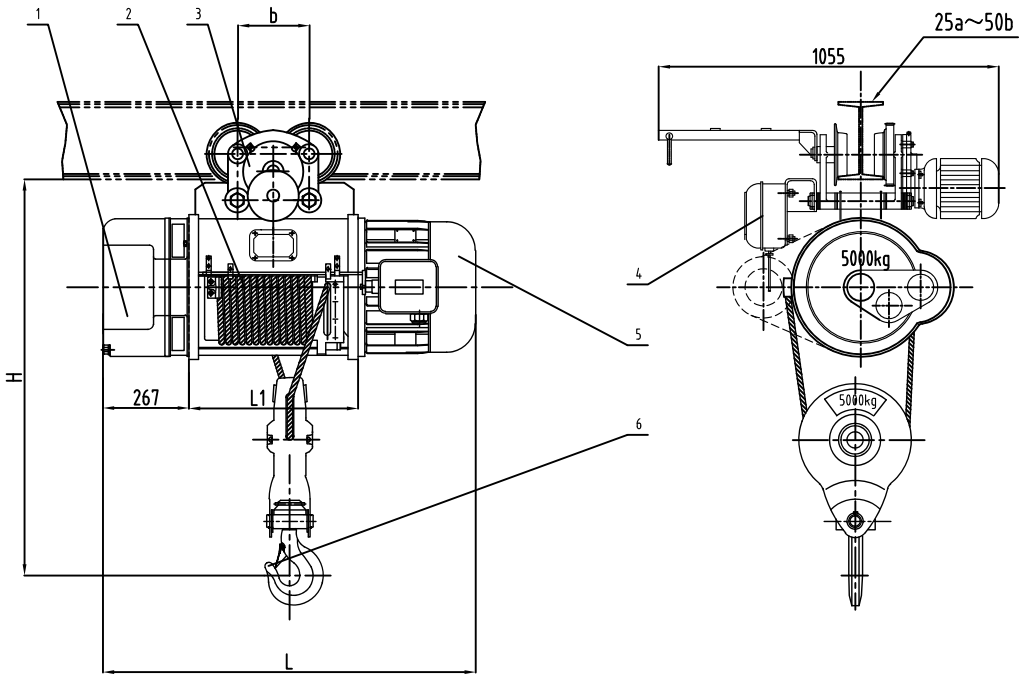

Lifting capacity	t	5	
Lifting height	m	6	9
Hoisting speed	m/min	8 (0.8/8)	
Traveling speed	m/min	20	
Working system		Intermediate JC=25%	
Combine time	Times per hour	120	
Lifting motor	Power kw	7.5 (0.8/7.5)	
	Rev r/min	1400	
Hoisting reducer ratio	i	81.2	
Reel diameter	mm	300	
Wirerope	GB8918	15NAT-6X37+FC 1670	
Traveling motor	Power kw	0.8	
	Rev r/min	1380	
Wheel dia	mm	154	
Traveling reducer ratio	i	30.5	
Working rail	Type	125a-150b GB706	
	Minimum radius (m)	2.5	2.5
Max. wheel loading	kg	3420	3805
Total weight (kg)	CD	473	495
	MD	508	532

Lifting height	6	9
L1	415	525
L	1047	1157
b	228	228
H	1120	

number	code	name	stuff	quantity	single weight (kg)	total weight (kg)	remark
6		Hook assembly	part	1			
5		Conic rotor brake motor	part	1			
4		Electrical installation	part	1			
3		Motor-driven carrier	part	2			
2		Reel device	part	1			
1		Reducer	part	1			

mark	Kinds	change file	sign	date	
design		standard			
check		electric			
verify		approval			
technic		date			

Electric hoist
CD₁ (MD₁) 5t

H=6m-9m

Yuantai Crane Machinery

Page one	Weight (kg)	Scale
Total		1:10

Reference drawing